Wilcoxon Research

Model 712F
High frequency, integral cable accelerometer

Features

- Corrosion resistant
- Hermetically sealed
- Ground isolated
- ESD protection
- Reverse wiring protection
- EMI/RFI protection

Dynamic

Sensitivity, ±10% @25°C	100 mV/g
Acceleration range	60 g peak
Amplitude nonlinearity	1%
Frequency response:	
±5%	9.0 - 15,000 Hz
±10%	6.0 - 20,000 Hz
±3 dB	3.0 - 25,000 Hz
Resonance frequency, mounted	›45 kHz
Transverse sensitivity, max	3% of axial
Temperature response	–50°C –10% +120°C +10%

Electrical

Power requirement: voltage source	18 - 30 VDC
current regulating diode	2 - 10 mA
Electrical noise, equiv. g, nominal:	
Broadband 2.5 Hz to 25 kHz	1,000 µg
Spectral 10 Hz	25 µg/√Hz
100 Hz	10 µg/√Hz
1000 Hz	8 µg/√Hz
Output impedance, max.	100 Ω
Bias output voltage, nominal	12 VDC
Grounding	case isolated, internally shielded

Environmental

Temperature range	–50 to 120°C
Vibration limit	±1,000 g
Shock limit, max.	5,000 g peak
Sealing	Hermetic
Base strain sensitivity, max	0.03 g/µstrain

Physical

Sensing element design	PZT ceramic / shear
Weight	35 grams
Case material	316L stainless steel
Mounting	8-32 captive screw with 0.047" diameter safety wire hole
Mating connector	N/A
Integral cabling	J9T2A, 16 ft. blunt cut

712F	Function
White	power / signal
Black	common
Shield	case

Top view

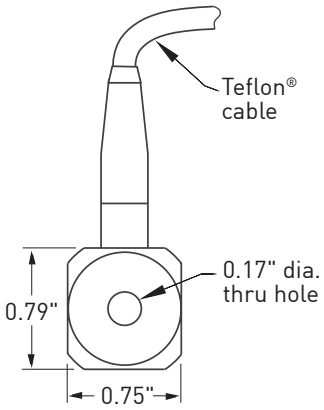

Side view

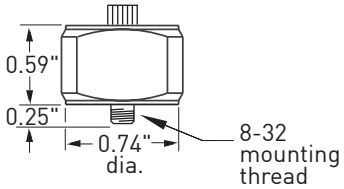

Accessories supplied: 8-32 captive screw; calibration data (level 2)

Accessories available: M4 captive screw

Wilcoxon Research Inc
21 Firstfield Rd
Gaithersburg, MD 20878
USA

Tel: 301 330 8811
Fax: 301 330 8873
Email: sensors@wilcoxon.com

www.meggitt.com

MEGGITT
smart engineering for
extreme environments