Wilcoxon Research

Model 775A
Pivoting, low cost, stud mount accelerometer

Features:
- Rugged assembly
- Hermetic seal
- ESD protection
- Reverse wiring protection
- Pivoting cable connection

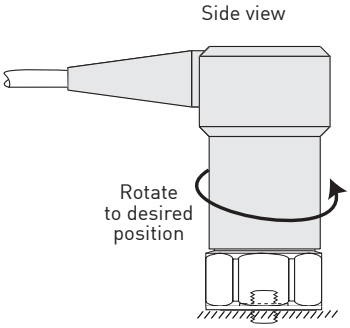

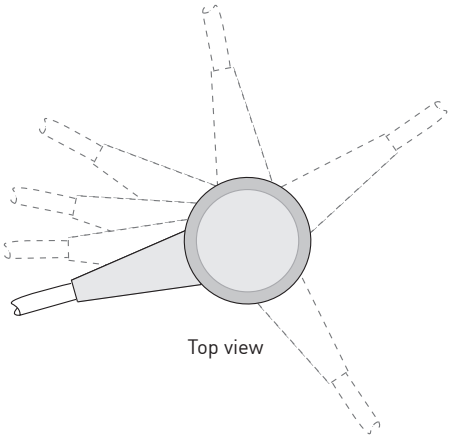

Dynamic

Sensitivity, ±20%, 25°C	100 mV/g
Acceleration range	80 g peak
Amplitude nonlinearity	1%
Frequency response, nominal:	
± 3 dB	24 CPM - 720,000 CPM (0.4 Hz - 12,000 Hz)
Resonance frequency, nominal	1,560 CPM (26 kHz)
Transverse sensitivity, max	5% of axial
Temperature response	–50°C –7% +80°C +5%

Electrical

Power requirement: voltage source	18 - 30 VDC
current regulating diode	2 - 10 mA
Electrical noise, equiv. g:	
Broadband 2.5 Hz to 25 kHz	700 µg
Output impedance, max	100 Ω
Bias output voltage	12 VDC
Grounding	case isolated

Environmental

Temperature range	–50 to 80°C (–60 to 175°F)
Vibration limit	500 g
Shock limit, min	5,000 g
Sealing	hermetic

Physical

Sensing element design	PZT ceramic / shear
Weight	45 grams
Case material	316L stainless steel
Mounting	1/4 - 28 tapped hole
Cable type	J96, 16ft., blunt cut
Cable boot material	Viton®

Function	cable conductor color
Common	black
Power / signal	white
Shield	shield

Accessories supplied: SF6 mounting stud (International customers specify mounting requirements); calibration data (level 2).
Accessories available: SF8 cementing pad.

Wilcoxon Research Inc
21 Firstfield Rd
Gaithersburg, MD 20878
USA

Tel: 301 330 8811
Fax: 301 330 8873
Email: sensors@wilcoxon.com

www.meggitt.com

MEGGITT
smart engineering for
extreme environments

98761 Rev.A.2 2/01